Golden Yard LLC.

PATIO SWING CHAIR

OWNER'S MANUAL AND SAFETY INSTRUCTIONS

SAVE THIS MANUAL: KEEP THIS MANUAL FOR SAFETY WARNINGS, PRECAUTIONS, ASSEMBLY, OPERATING, INSPECTION, MAINTENANCE AND CLEANING PROCEDURES.

IMPORTANT SAFETY INFORMATION

WARNING

GENERAL SAFETY WARNINGS

The warnings, precautions, and instructions discussed in this instruction manual cannot cover all possible conditions and situations that may occur. It must be understood by the operator that common sense and caution are factors which cannot be built into this product, but must be supplied by the operator. Read carefully and understand all instructions before operating. Failure to follow the safety rules and other basic safety precautions may result in serious personal injury.

• Please keep away from sources of extreme heat and naked flame.

• Please read through this instruction before beginning assembly.

• Two adults assembly is recommended.

• Clear out the space for assembly and lay out all parts base on Parts List, extra room will allow you to easily determine if all the pieces are present.

• Save all packing materials until assembly is complete to avoid accidentally discarding smaller parts or hardware.

• Keep small parts and pieces away from children until fully assembly.

• Use on even surfaces only.

• Improper use of this product or failure to use as directed may result in injury.

• Do not swing in the chair beyond the perimeter of the base as doing so may result in the chair tipping over and could result in injury.

• Ensure that all bolts are securely tightened before use. It is recommended that you re-check all nuts and bolts occasionally and re-tighten as necessary.

SAVE THESE SAFETY WARNINGS.

ASSEMBLY

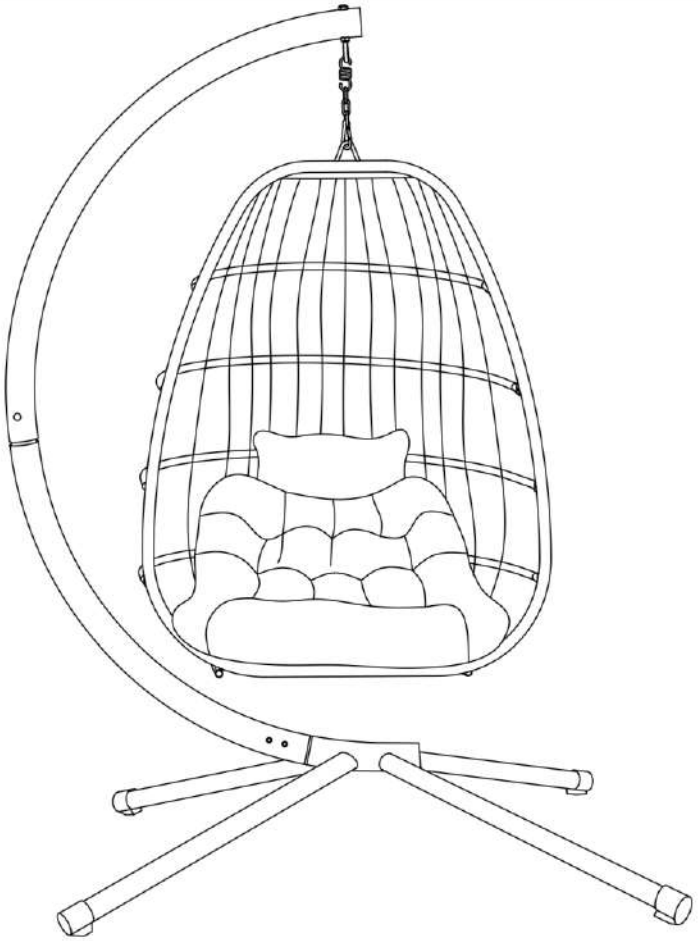

		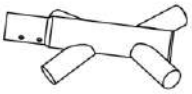	
A 1	B 1	C 1	D 4
E 1	F 1	G 1	H 5
I 1	J 1	K 4	L 4
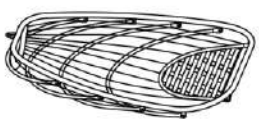		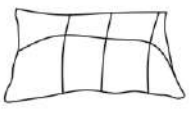	
M 1	N 1	O 1	P 1

ASSEMBLY

1

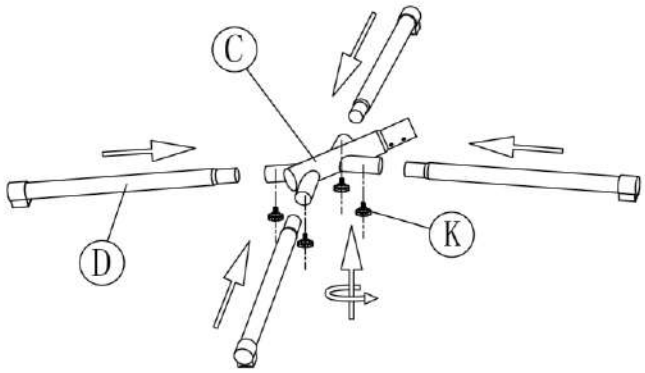

2

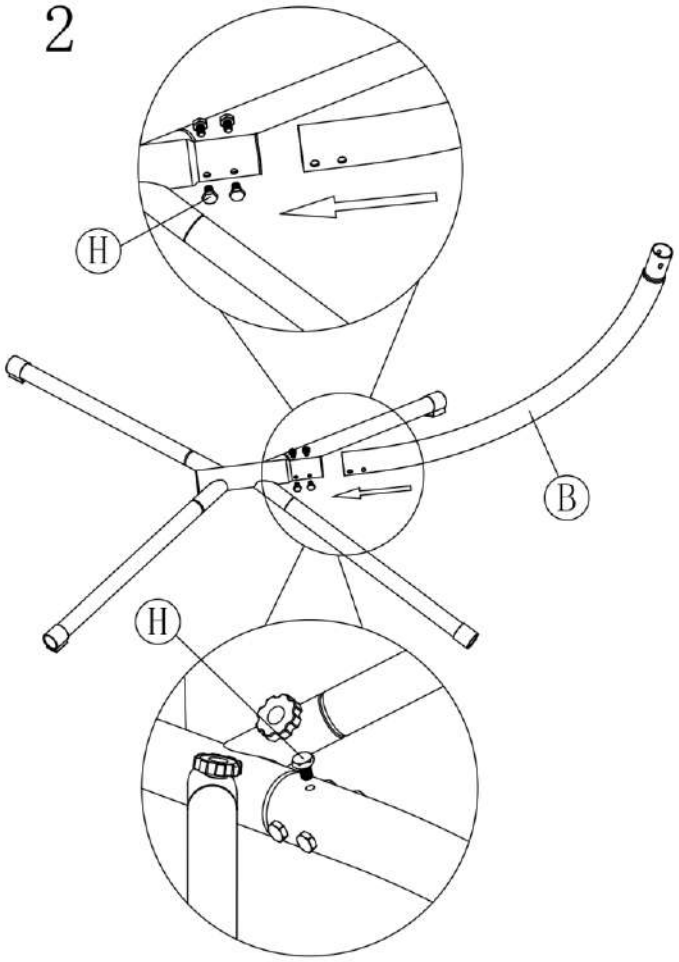

3

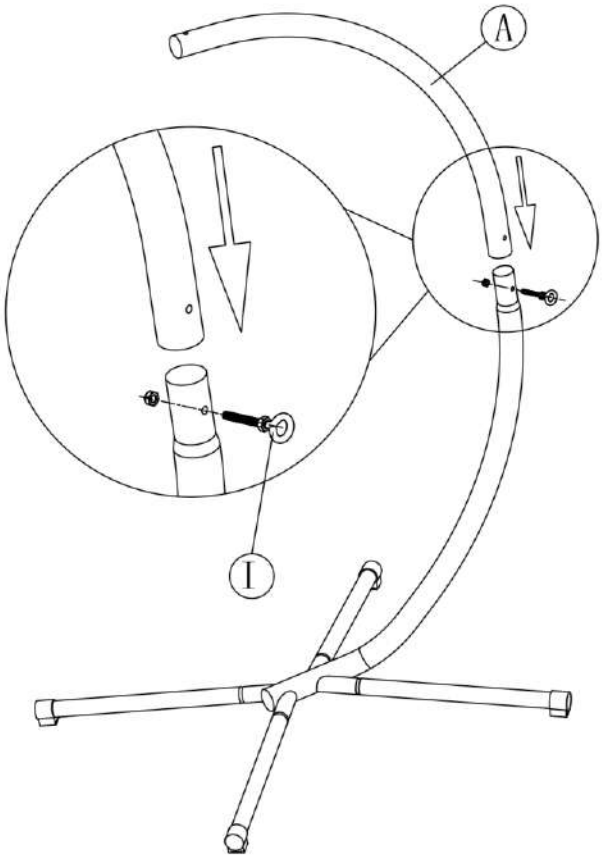

4

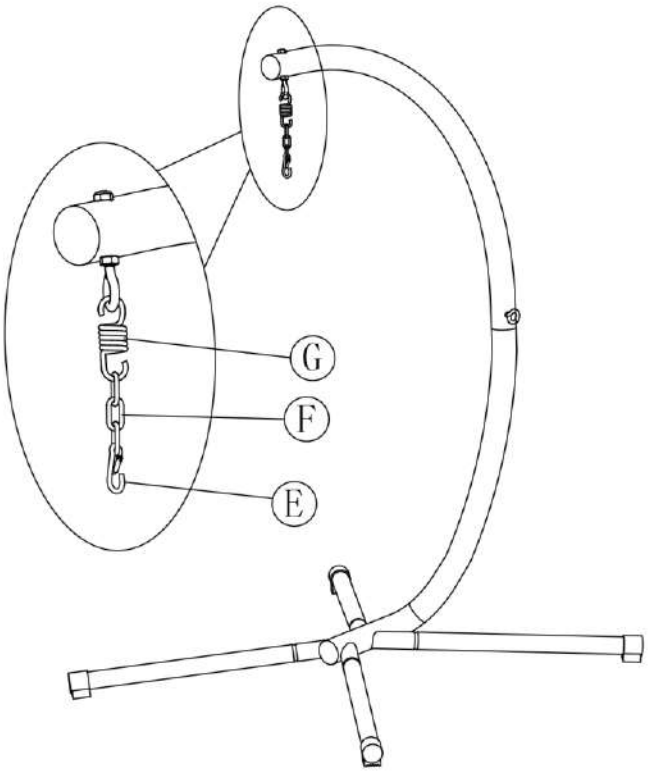

ASSEMBLY

5

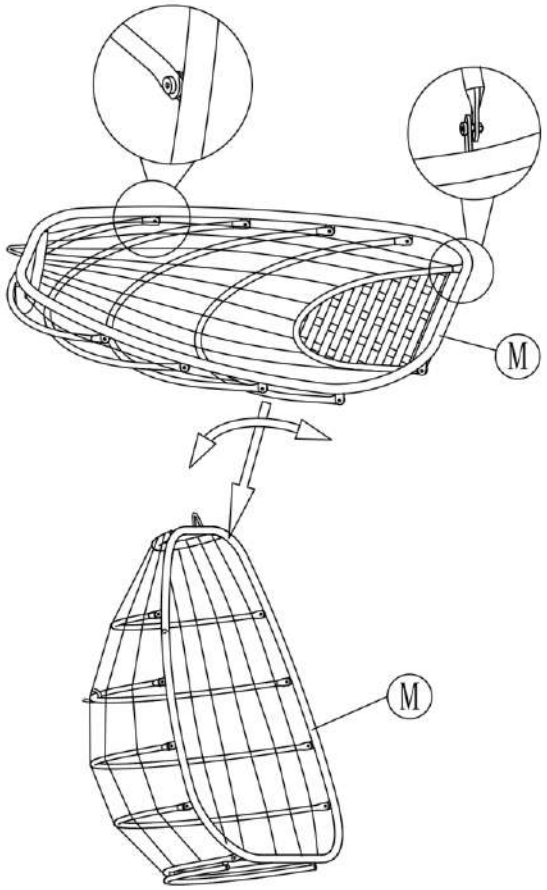

6

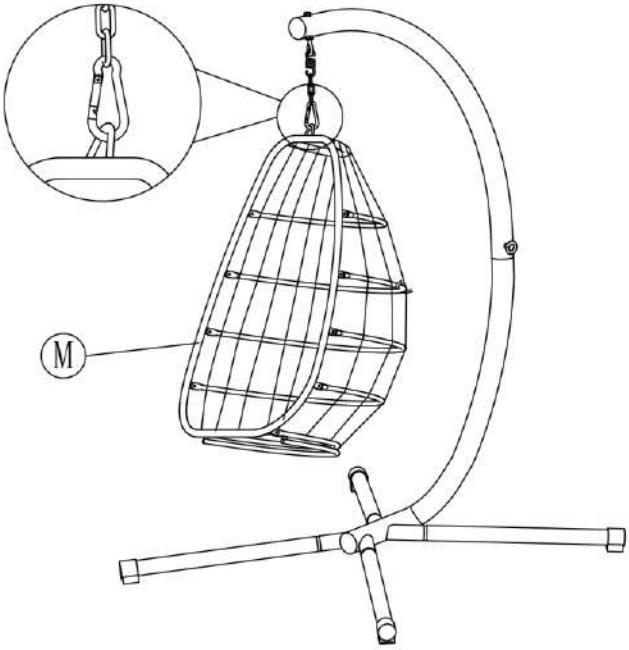

7

ATTENTION:
Please make sure the knots of the safety rope are fastened

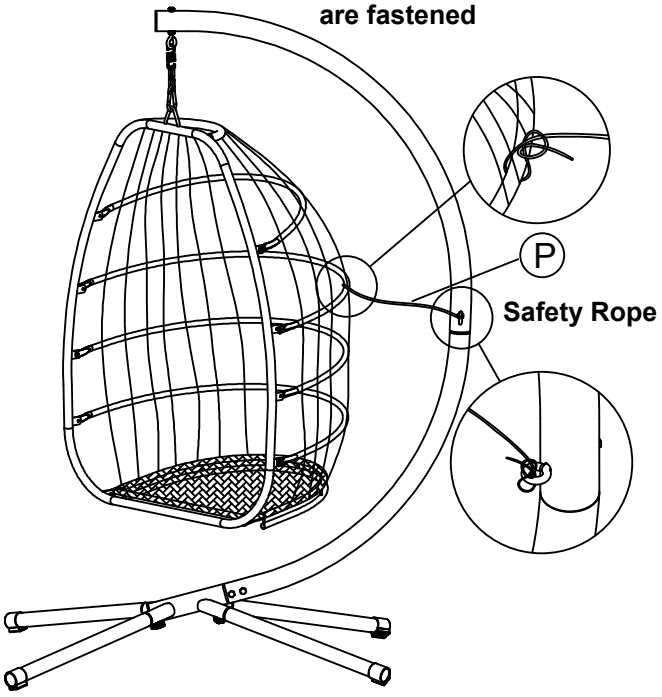

8

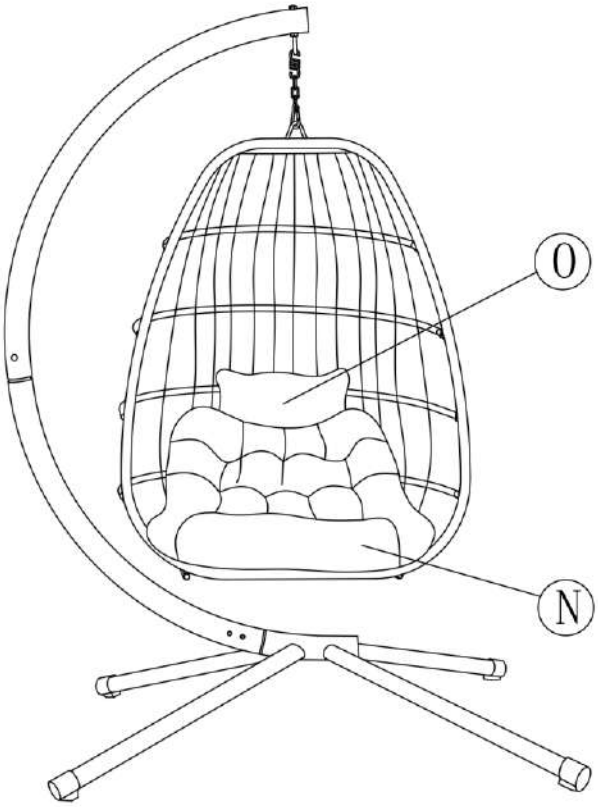

PLEASE READ THE FOLLOWING CAREFULLY

THE MANUFACTURER AND/OR DISTRIBUTOR HAS PROVIDED THE PARTS LIST AND ASSEMBLY DIAGRAM IN THIS MANUAL AS A REFERENCE TOOL ONLY. NEITHER THE MANUFACTURER OR DISTRIBUTOR MAKES ANY REPRESENTATION OR WARRANTY OF ANY KIND TO THE BUYER THAT HE OR SHE IS QUALIFIED TO MAKE ANY REPAIRS TO THE PRODUCT, OR THAT HE OR SHE IS QUALIFIED TO REPLACE ANY PARTS OF THE PRODUCT. IN FACT, THE MANUFACTURER AND/OR DISTRIBUTOR EXPRESSLY STATES THAT ALL REPAIRS AND PARTS REPLACEMENTS SHOULD BE UNDERTAKEN BY CERTIFIED AND LICENSED TECHNICIANS, AND NOT BY THE BUYER. THE BUYER ASSUMES ALL RISK AND LIABILITY ARISING OUT OF HIS OR HER REPAIRS TO THE ORIGINAL PRODUCT OR REPLACEMENT PARTS THERETO, OR ARISING OUT OF HIS OR HER INSTALLATION OF REPLACEMENT PARTS THERETO.

Record Product's Serial Number Here: _____

Note: If product has no serial number, record month and year of purchase instead.

Note: Some parts are listed and shown for illustration purposes only and are not available individually as replacement parts.

SAVE THESE INSTRUCTIONS.

PRODUCT MADE IN CHINA

FROM LinHai BeiYou Trading co.,Ltd.